A High Linear Gilbert-cell Mixer Design by Integrated Transformer-base Balun

Yi-Ching Wu[1], Ping-Sheng Wu[1], Lung-Shu Huang[1], Sung-Mao Wu[1], Cheng-Fu Yang[2]

[1]Department of Electrical Engineering, National University of Kaohsiung
No.700, Kaohsiung University Rd., Nan-Tzu Dist., Kaohsiung, Taiwan
[2]Department of Chemical and Materials Engineering, National University of Kaohsiung
No.700, Kaohsiung University Rd., Nan-Tzu Dist., Kaohsiung, Taiwan
Tel: 886-7-5919436, Fax: 886-7-5919374, E-mail: sungmao@nuk.edu.tw

1. *Introduction*

For RF system, mixer is an important component. Since the transmission signal in baseband is working in lower frequency normally. In radio frequency receiver front-end, a modulation of down conversion is needed, which is a mixer play in. Mixer can translate high frequency signal from low noise amplifier into low frequency signal for base-band system.

Normally, the active mixer is usually designed on Si substrate. However, the loss of signals for the passive component on the Si substrate is respectably big. Therefore, gradually more and more researches about integrating circuits are presented. This concept combined different processes in one circuit to raise the Quality Factor of passive components and make the characteristics of circuits better than before. In this paper, we use the concept to carry out the high linearity Gilbert-cell mixer with integrated transformer-based balun.

2. *Integrated Circuit Design and Layout*

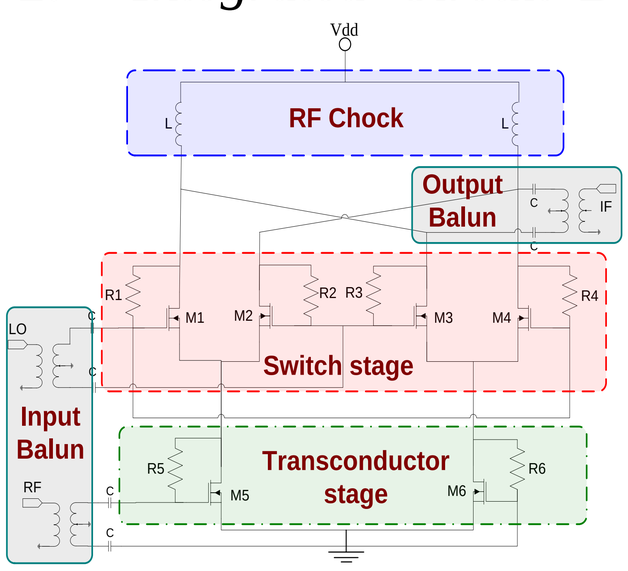

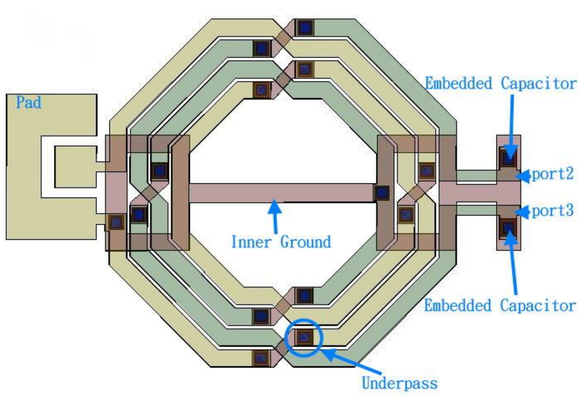

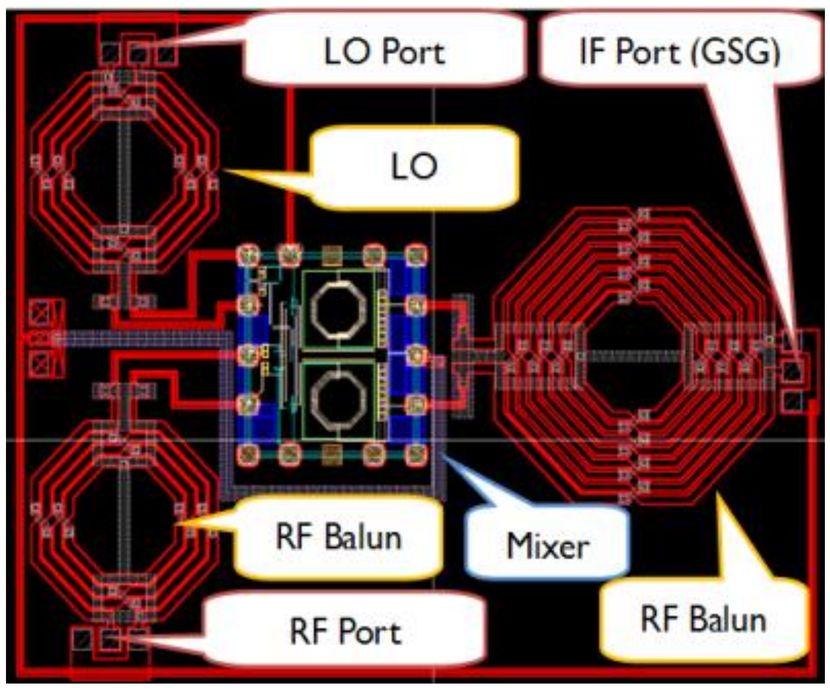

3. *Simulation Result*

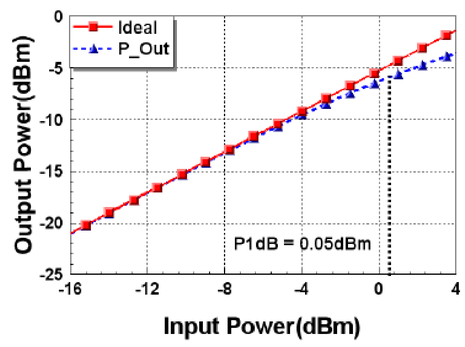

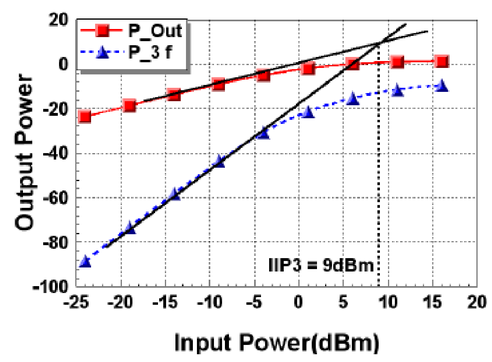

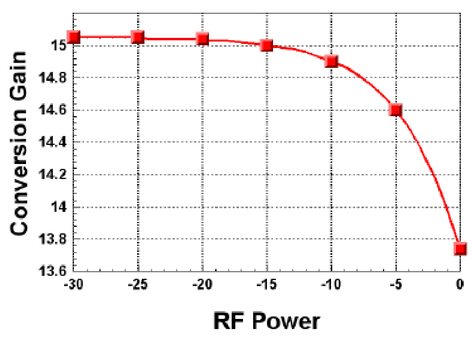

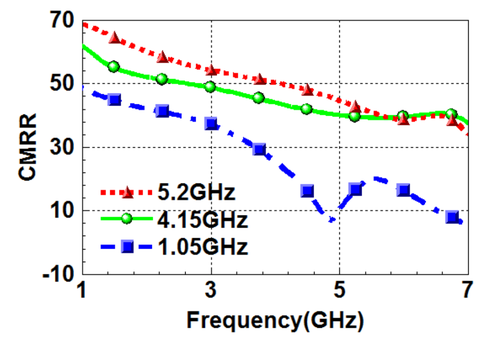

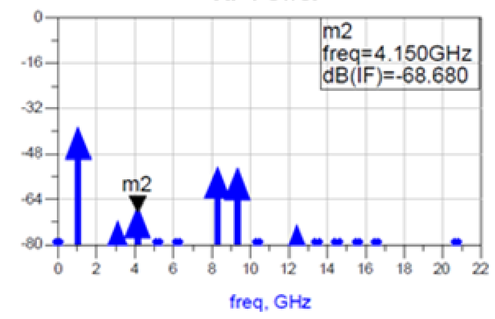

LO to IF isolation

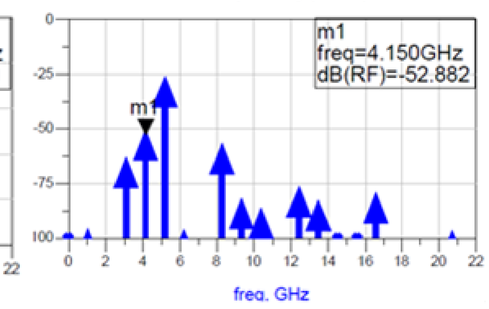

LO to RF isolation

4. *Conclusions*

In this paper, we design the symmetric balun and high linearity mixer. The mixer integrated with symmetric baluns show a good electrical performance. The simulate conversion gain, input P1dB, IIP3, noise figure, FOM is excellent and the overall circuit improve the IIP3 greatly. Results illustrate that integrated circuit by diffrent processes raise the Quality Factor of passive components and make the linearity of overall circuit better than before

Finally, the mixer will realize the circuit on the chip by glass substrate integrated passive device (GIPD) processes and 0.18 um CMOS processes to make sure the practicality of this work.

In the future, there are a lot of integrated circuit can be achieved, such as PA, LNA, and VCO etc. Their match circuit or resonantor can use the same concept to achieve.

References

(1) Hong Qi Chen Junning Pan Hao Meng Jian," A 1.2V High Linearity Mixer Design," *ICEMI, 2007.*

(2) Sung-Mao Wu, Wang-Yu Lin, Kao-Yi Wang, Chien-Hsiang Huang, Wen-KuanYeh, "The High Balance Symmetric Balun for WLAN and WiMAX Application Using the IntegratedPassive Device (IPD) Technology", *2009 ICEPT-HDP.*

(3) A. Saberkari and S. B. Shokouhi, "A 2.4 GHz High Performance CMOS Sub-Harmonic Mixer," *IAJC-IJME 2008 Conference*.

(4) H. Ming-Feng, L. Shuenn-Yuh, and J. K. Chung, "A 5.25 GHz Even Harmonic Mixer for Low Voltage Direct Conversion Receivers," in *Asian Solid-State Circuits Conference, 2005*, 2005, pp. 321-324.

(5) C. Chih-Hao, C. Pei-Yuan, and C. F. Jou, "A Low Voltage Mixer With Improved Noise Figure," *Microwave and Wireless Components Letters, IEEE*, vol. 19, pp. 92-94, 2009.

(6) H. Ming-Feng, L. Shuenn-Yuh, and C. J. Kuo, "A 5.25 GHz CMOS even harmonic mixer with an enhancing inductance," in *Circuits and Systems, 2005. ISCAS 2005. IEEE International Symposium on*, 2005, pp. 2116-2119 Vol. 3.

微電子構裝實驗室
Micro-Electronics Packaging Laboratory