ICNSE -833
Transformer Based Broadband and High Tuning Sensitivity VCO Detector and RF Source for On-Package PI and SI Verification

Shi-Yao Chu, Yu-Ru Lo, Yu-Yung Wu, Wei-Chi Chen, Sung-Mao Wu*
Micro Electrical Packaging Laboratory, Department of Electrical Engineering, National University of Kaohsiung, Taiwan
*E-mail: sungmao@nuk.edu.tw

Abstract

This paper presents a dual wideband and high tuning sensitivity voltage-controlled oscillator with a switchable transformer resonator. This work utilizes a pair of transformer to make the tuning range of both band closed and covered each other a little and it forms a greatly wide tuning range. The tuning range of the dual band is from 5.2 GHz to 6.76 GHz and from 6.2GHz to 8.75 GHz and the KVCO approximates 960MHz / Volt. This dual band VCO is implemented using 0.18 um CMOS technology.

Keyword: Voltage controlled oscillator (VCO), transformer, dual-band, broadband, sensitivity

1. Introduction

With the rapid development of electronic world and IC package, the effect of high frequency and high speed electronic circuit on package has become more obvious. The problems which the designers face are analyzing the effect brought from the package in a simplicity way .These effects include both Power Integrity (PI) and Signal Integrity (SI).[8]

The PI problems such as DC IR-drop causes the voltage of the chip lower than the voltage supplied from power supply, and results in the wrong operating condition. The SI problems such as resonance, impedance mismatch, and the return current path discontinue may cause the output signal into distortion, delay, or reduce the intensity. Therefore, the next-stage circuit has difficulty in judging the logic level.

To analyze the effects on the package, a VCO detector is designed. Because the VCO can provide a pure sinusoidal signal steady, SI problems will be found easily. In addition, DC IR-drop of the package can be tested by comparing the output sweep of the VCO.

For raising the accuracy of measurement, it has to improve some characterization of the VCO such as bandwidth, linearity and sensitivity. Relevant works about broadband usually focus

on a single-band VCO with a wide tuning range. However, this paper uses the switch and transformer in the structure to make a dual-band VCO which has a wide bandwidth. A dual-band VCO usually works on different frequency which operating far away of each other. But this work makes tuning range of these two bands closed and covered part and form a band with wide tuning range, as the figure1 shown.

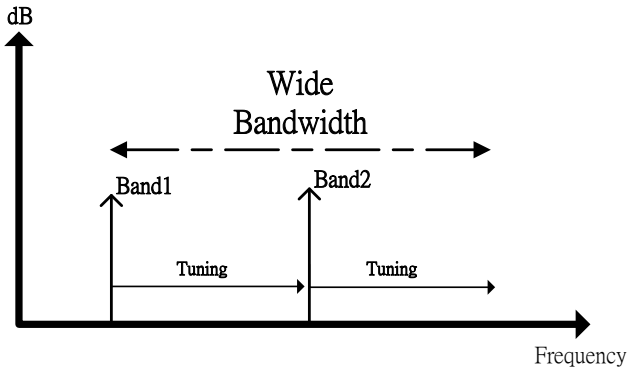

Fig. 1 Illustration of dual band

2. Main Body

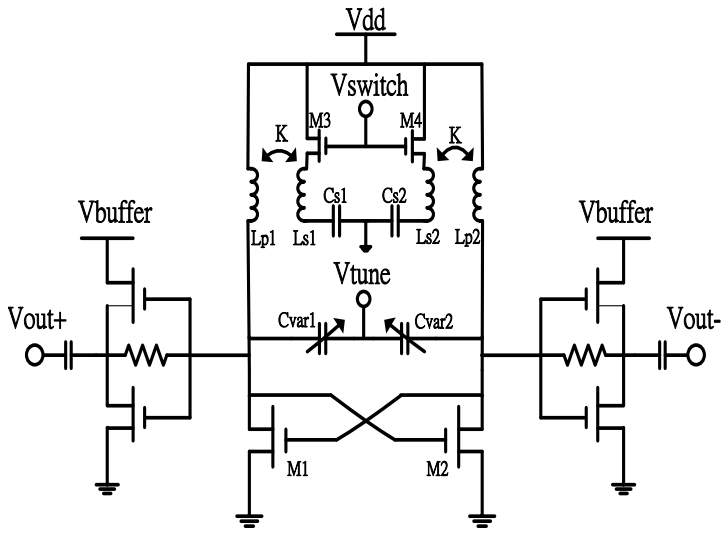

Fig. 2 Schematic diagram of the VCO

2.1 Figures and Tables

Figure 2 shows the structure of the wide tuning range and high sensitivity dual-band VCO with the switchable resonator.

In the structure, the negative resistance is achieved by the NMOS cross-coupled pair M1-M2. The primary resonator is formed by the primary inductances Lp1, Lp2, and the

VARACTOR's capacitances Cvar1, Cvar2, and the secondary resonator formed by the secondary inductances Ls1, Ls2, and the capacitances Cs1, Cs2. The switch of the secondary resonator is composed of two NMOS transistors M3-M4.

The operation way of this work is mainly controlled by the switch. As the switching device turns on and off the secondary resonator, the tuning-range frequency will be changed. When the switch is turned off, the VCO is operated at higher band. The resonator will work at the effective inductance and capacitance which given as L_1 = Lp1 + Lp2 and C_1 = Cvar1 || Cvar2. When switch is turned on, the resonator worked at lower band and the effective inductance and capacitance given as L_2 = Lp1 + Lp2 + Ls1 +Ls2 – 4M and C_2 = (Cvar1 || Cvar2) + (Cs1 || Cs2). The operating frequency is given as:

$$\omega = \frac{1}{\sqrt{LC}} \quad \text{……... (1)}$$

By modulating inductance of the transformer in the structure, this work can adjust the tuning range of the wide band. High band and low band boundary are coverage of both bands to make the frequency sweep linearly.

Table I

Output frequency of VCO

Band	**Lower Band**	**Higher Band**
Frequency (GHz)	5.2GHz~6.76GHz	6.2~8.75GHz

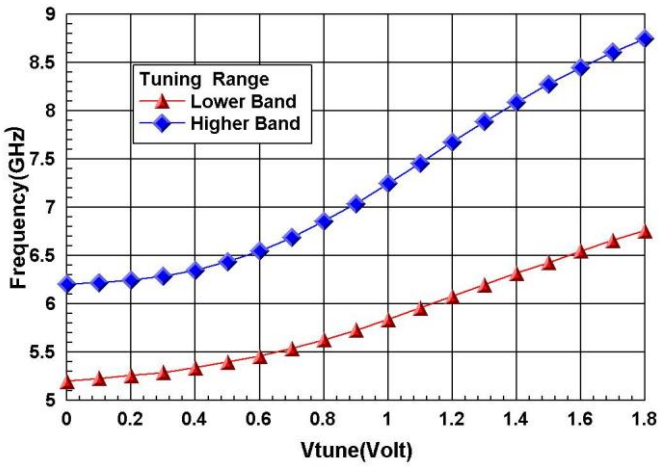

Fig. 3 Frequency tuning curves of the VCO

2.2 Transformer Design

Figure 4 shows the transformer which used as an inductor in this circuit design. A pair of two intertwined symmetrical plane octagonal inductance was designed based on concept of balun and transformer. By adjusting the line width, spacing, and the inner diameter of two different inductor values generate dual-band signal oscillation output.

Due to the corner of the transformer which generated by the intertwined method, the signal transmission will have some reflection. It makes electric field distribute unevenly, leading to some extra charge in the corner and resistance losses. In addition, current discontinuity will result in the generation of the inductive effect, affecting the flow of current on the boundary. In order to improve the effects of turning point, we change the Rabjohn Balun that has a square and symmetric property into the octagonal structure.

A transformer which been used in this research can offer an adapted inductance and better quality factor than an inductor in the same area. Using transformer as inductor is easy to reach two different inductor values producing dual-band oscillatory signal. Besides, the higher quality factor makes circuit generate better performance.

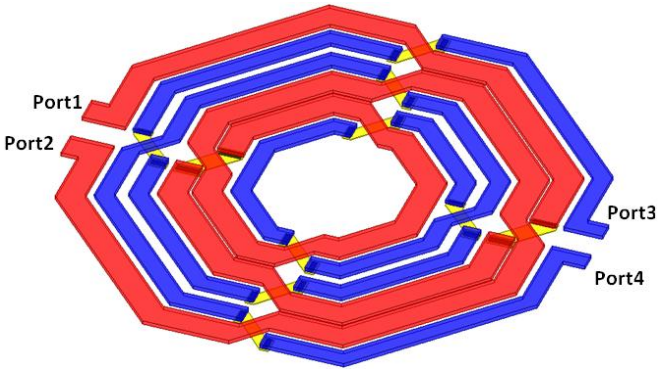

Fig. 4 Frequency tuning curves of the VCO

2.3 Accuracy Improvement

Relevant VCO structure used the switched capacitors array to achieve the characterization of evaluating the package effects accurately [1]. However, it faced some problems that the differential out signal is not symmetrical and the power dissipation is large. There inferred that these problems might be caused by the unsymmetrical structure in the circuit and the amount of MOS transistors are too much. Because of these disadvantages, this work uses the switchable resonance to replace the switchable capacitances. Therefore, the sensitivity and tuning range are promoted. Besides, other defects are also improved.

TABLE II

COMPARISON BETWEEN THE VCO DETECTOR

VCO	Tuning Range	K_{VCO} (Sensitivity)
[1]	4.6GHz~5.98GHz	211MHz/volt
This work	*5.2GHz~8.75GHz*	*967MHz/volt*

2.4 Result and Discussion

This dual band VCO is based on TSMC 0.18μm process technology, and the supply voltage is 1V. It uses the switch and transformer to create a switchable resonator. TABLE III lists the comparison of VCO phase noise, tuning range, and the bandwidth in each band. In this work, the characterization like bandwidth and sensitivity is principal for improving the accuracy of measurement. Though the phase noise is not excellent, the tuning range and sensitivity is better than the others by comparing with the other VCO in Table III.

Table III

Comparison of VCO performance

Reference	Process(μm)	Center Freq. (GHz)	Phase noise (dBc/Hz) @1MHz	Oscillation Freq. (GHz)	Average band width (MHz)
[1]	0.18	5.25	-116.70	5.12~5.39	172.5
[9]	0.25	2.25	-120	1.94~2.55	840
		4.18	-112	3.6~4.77	1060
[10]	0.18	11	-101	9.57~12.43	2860
		19	-90	17.86~20.14	2280
This work	***0.18***	***5.29***	***-108.479***	***5.2~6.76***	***1380***
		6.97	***-109.463***	***6.2~8.75***	***2550***

2.5 Conclusion

In this research, a wide tuning range dual-band VCO is designed by a switchable transformer resonator to analyze the package effect. For this purpose, some characterizations such as bandwidth, and the sensitivity have to be important. Wide bandwidth enhances the application in testing the different package. High sensitivity lets the frequency of the signal vary obviously when the IR-drop takes place on path of the package. Furthermore, waveform and spectrum can be used to test package effect.

3. References

[1] Guan-Min Wang; Yu-Yung Wu; Sin-Shyh, N.G.; Lung-Shu Huang; Sung-Mao Wu, "A broadband and high tuning sensitivity VCO detector for on-package IR-drop and signal-integrity measurement," Microwave Conference Proceedings (APMC), 2012 Asia-Pacific , vol., no., pp.292,294, 4-7 Dec. 2012

[2] Sang-yeop Lee; Amakawa, S.; Ishihara, N.; Masu, K.; "Low-phase-noise wide-frequency-range differential ring-VCO with non-integral subharmonic locking in 0.18/µm CMOS," *Microwave Integrated Circuits Conference (EuMIC)*, 2010 European, vol., no., pp.464-467, 27-28 Sept. 2010

[3] Nakamura, T.; Masuda, T.; Shiramizu, N.; Washio, K.; Kitamura, T.; Hayashi, N.; "A Wide-tuning-range VCO with Small VCO-gain Fluctuation for Multi-band W-CDMA RFIC," Solid-State Circuits Conference, 2006. ESSCIRC 2006. Proceedings of the 32nd European , vol., no., pp.448-451, 19-21 Sept. 2006

[4] Hara, Y.; Sakurai, H.; Sugimoto, Y.; , "A 2.5 GHz CMOS LC VCO with improved phase noise based on the transformer feedback scheme," Microwave Conference, 2006. APMC 2006. Asia-Pacific , vol., no., pp.1004-1007, 12-15 Dec. 2006

[5] Ja-Yol Lee; Sang-Heung Lee; Hyun-Cheol Bae; Sang-Hoon Kim; , "A Concurrent Dual-Band VCO with Dual Resonance in Single Resonator," Silicon Monolithic Integrated Circuits in RF Systems, 2007 Topical Meeting on , vol., no., pp.135-138, 10-12 Jan. 2007

[6] Lu, K.-C.; Chen, Y.-J.; Horng, T.-S.; Wu, J.-M.; , "A dual wideband and low phase-noise CMOS voltage-controlled oscillator with a transformer-based switching resonator," Microwave Conference Proceedings (APMC), 2010 Asia-Pacific , vol., no., pp.562-565, 7-10 Dec. 2010

[7] Seok-Ju Yun; Hui Dong Lee; Kwi-Dong Kim; Sang-Gug Lee; Jong-Kee Kwon; "A Wide-Tuning Dual-Band Transformer-Based Complementary VCO," Microwave and Wireless Components Letters, IEEE , vol.20, no.6, pp.340-342, June 2010.

[8] Lim Chin Chuan; Wong Tai Loong; , "Simulation- measurement correlation study of single ended interfaces by using Signal Integrity and Power Integrity co-simulation," Electronic Manufacturing Technology Symposium (IEMT), 2010 34th IEEE/CPMT International , vol., no., pp.1-4, Nov. 30 2010-Dec. 2 2010

[9] Catli, B.; Hella, M.M., "A Dual Band, Wide Tuning Range CMOS Voltage Controlled Oscillator for Multi-Band Radio," Radio Frequency Integrated Circuits (RFIC) Symposium, 2007 IEEE , vol., no., pp.595,598, 3-5 June 2007

Jie-Ying Zhong; Sen Wang, "An 11/19-GHz VCO using switchable transformer in 0.18-µm CMOS," Cross Strait Quad-Regional Radio Science and Wireless Technology Conference (CSQRWC), 2012 , vol., no., pp.78,81, 23-27 Jul